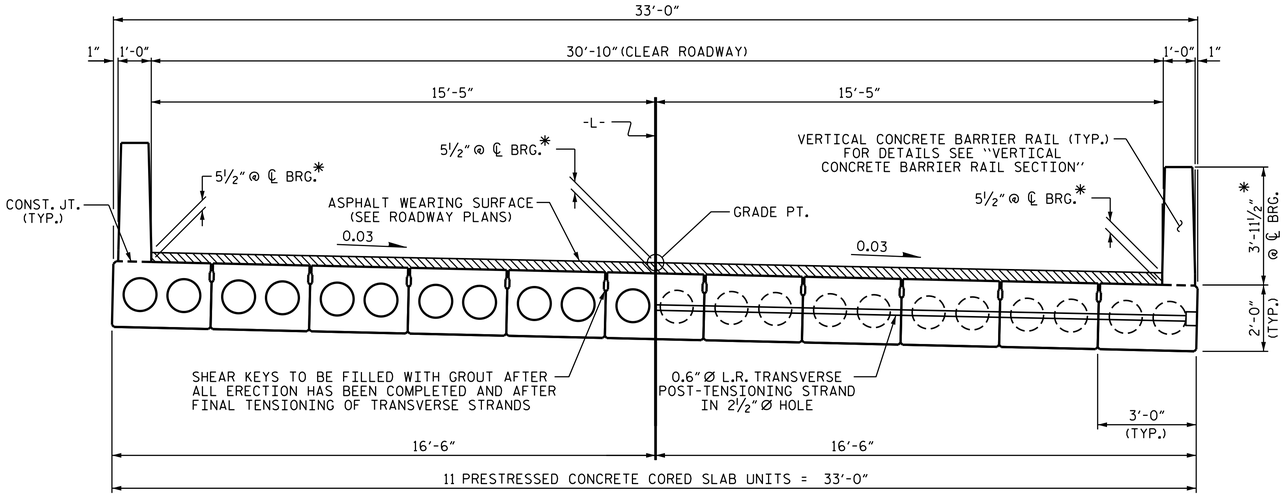

HALF SECTION
THROUGH VOIDS

TYPICAL SECTION

HALF SECTION
AT INTERMEDIATE DIAPHRAGMS

* - THE MAXIMUM BARRIER RAIL HEIGHT AND ASPHALT THICKNESS IS SHOWN. THE HEIGHT OF THE BARRIER RAIL AND ASPHALT THICKNESS VARIES WHILE THE TOP OF THE BARRIER RAIL FOLLOWS THE PROFILE OF THE GUTTERLINE. FOR RAIL HEIGHT AND ASPHALT THICKNESS, SEE THE "GUTTERLINE ASPHALT THICKNESS & RAIL HEIGHT" TABLE.

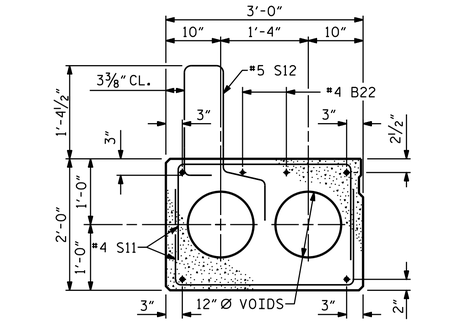

EXTERIOR SLAB SECTION

(FOR PRESTRESSED STRAND LAYOUT, SEE INTERIOR SLAB SECTION.)

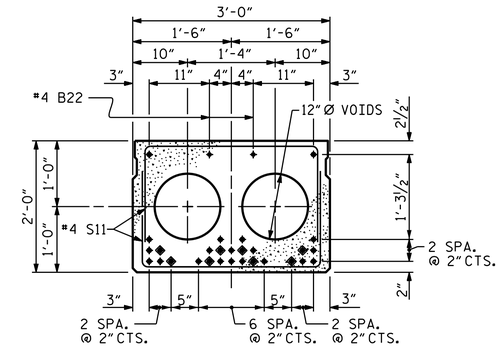

INTERIOR SLAB SECTION

(28 STRANDS REQUIRED)

0.6" Ø LOW RELAXATION STRAND LAYOUT

◈ BOND SHALL BE BROKEN ON THESE STRANDS FOR A DISTANCE OF 12'-0" FROM END OF CORED SLAB UNIT. SEE STANDARD SPECIFICATIONS, ARTICLE 1078-7.

DEBONDING LEGEND

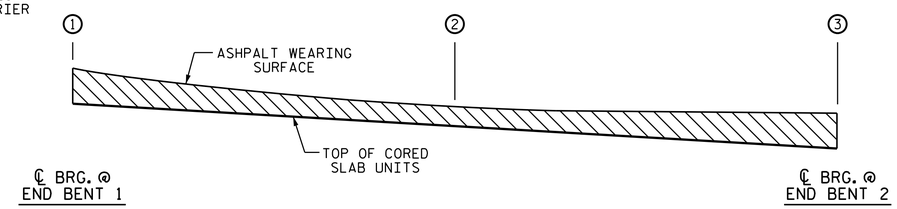

ELEVATION

SEE TABLE BELOW

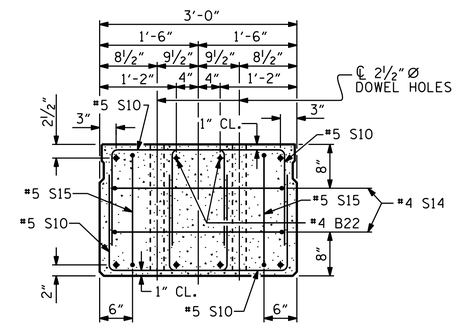

END ELEVATION

SHOWING PLACEMENT OF DOUBLE STIRRUPS AND LOCATION OF DOWEL HOLES. (STRAND LAYOUT NOT SHOWN.) INTERIOR SLAB UNIT SHOWN-EXTERIOR SLAB UNIT SIMILAR EXCEPT SHEAR KEY LOCATION.

FIXED END

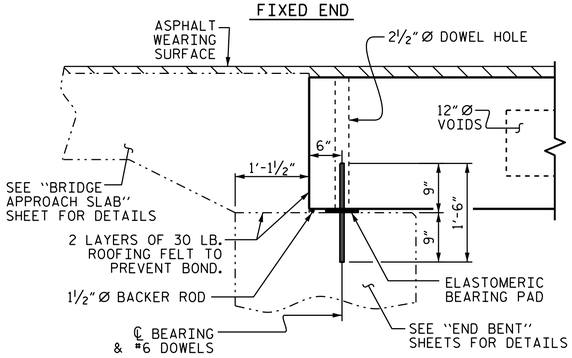

SECTION AT END BENT

GUTTERLINE ASPHALT THICKNESS & RAIL HEIGHT			
	STATION	ASPHALT OVERLAY THICKNESS	RAIL HEIGHT
①	13+35.51 -L-	5½"	3'-11½"
②	13+70.00 -L-	1⅝"	3'-7⅝"
③	14+04.51 -L-	5½"	3'-11½"

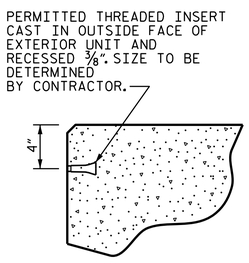

THREADED INSERT DETAIL

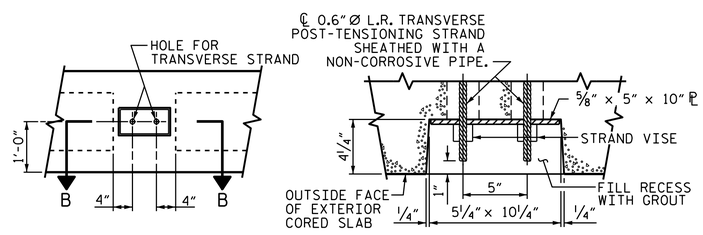

ELEVATION VIEW

SECTION B-B

GROUTED RECESS AT END OF POST-TENSIONED STRAND-CORED SLABS

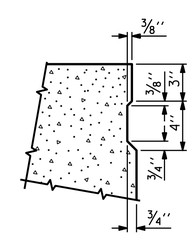

SHEAR KEY DETAIL

NOTE: OMIT SHEAR KEY ON OUTSIDE FACE OF EXTERIOR CORED SLABS.

PROJECT NO. B-5760
RICHMOND COUNTY
STATION: 13+70.00 -L-

SHEET 1 OF 3

STATE OF NORTH CAROLINA
DEPARTMENT OF TRANSPORTATION
RALEIGH

3'-0" X 2'-0" PRESTRESSED CONCRETE CORED SLAB UNIT

NORTH CAROLINA PROFESSIONAL SEAL 039349 ENGINEER JEREMY P. McCARTHA

DocuSigned by: Jeremy McCartha
F2E41195C003476...
10/26/2016

DOCUMENT NOT CONSIDERED FINAL UNLESS ALL SIGNATURES COMPLETED

REVISIONS						SHEET NO.
NO.	BY:	DATE:	NO.	BY:	DATE:	S-5
1			3			TOTAL SHEETS
2			4			14

ASSEMBLED BY : J.S. SMITH		DATE : 7/6/16	
CHECKED BY : J. K. BOWLES		DATE : 7/21/16	
DRAWN BY : MAA	6/10	REV. 9/14	MAA/TMG
CHECKED BY : MKT	7/10		

26-OCT-2016 14:21
A:\Division08\B5760\Structures\Plans\B-5760_SMU_CS.dgn
jpmccartha

STD. NO. 24PCS4_33_90S