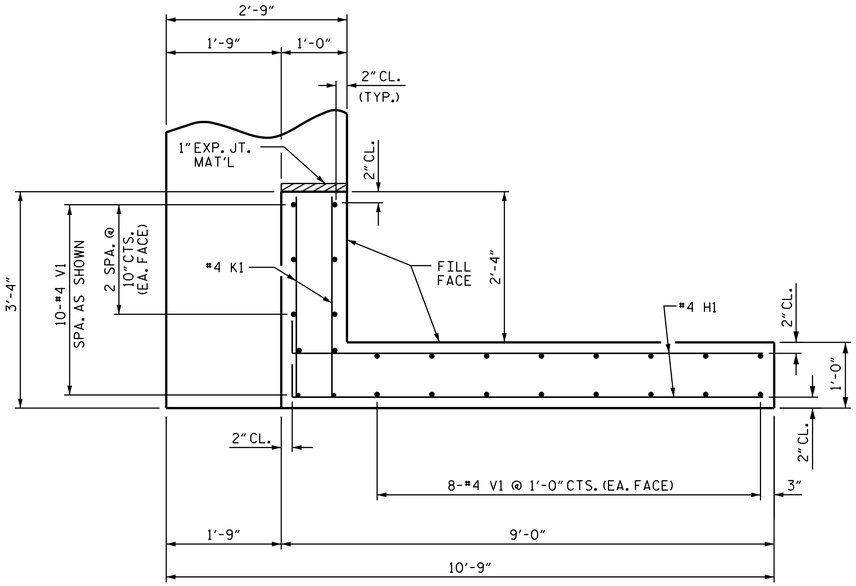

PLAN OF WING (W1)

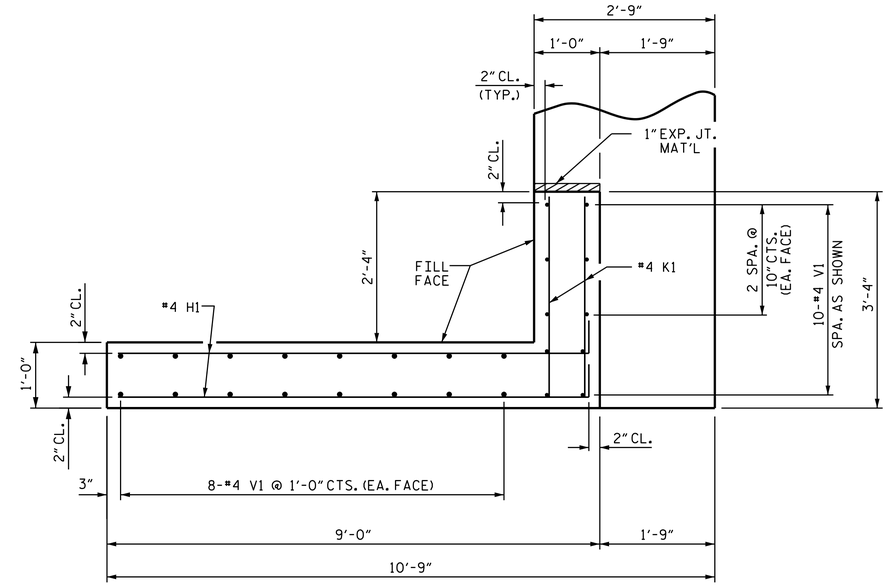

PLAN OF WING (W2)

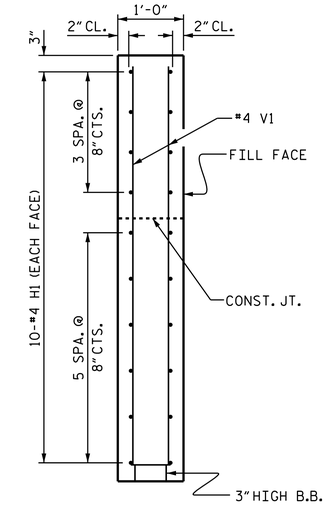

SECTION X-X

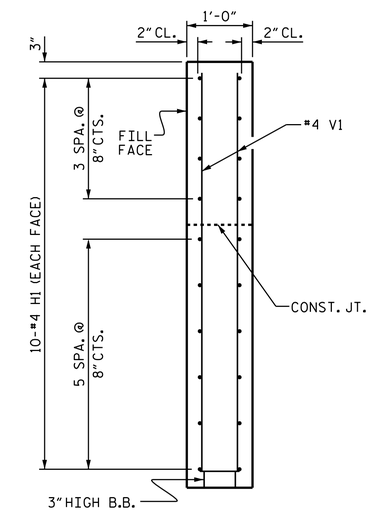

SECTION Y-Y

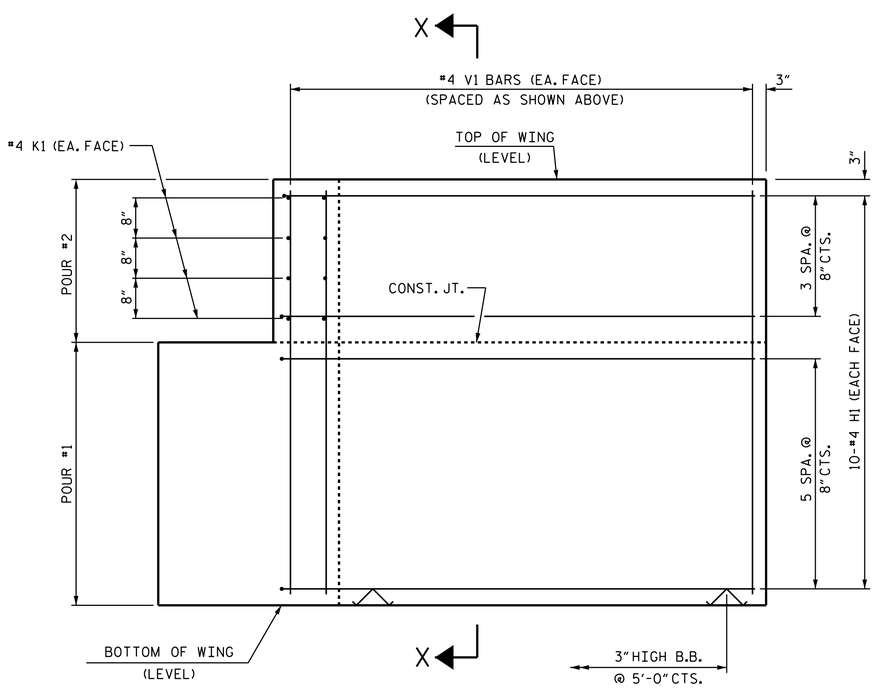

ELEVATION OF WING (W1)

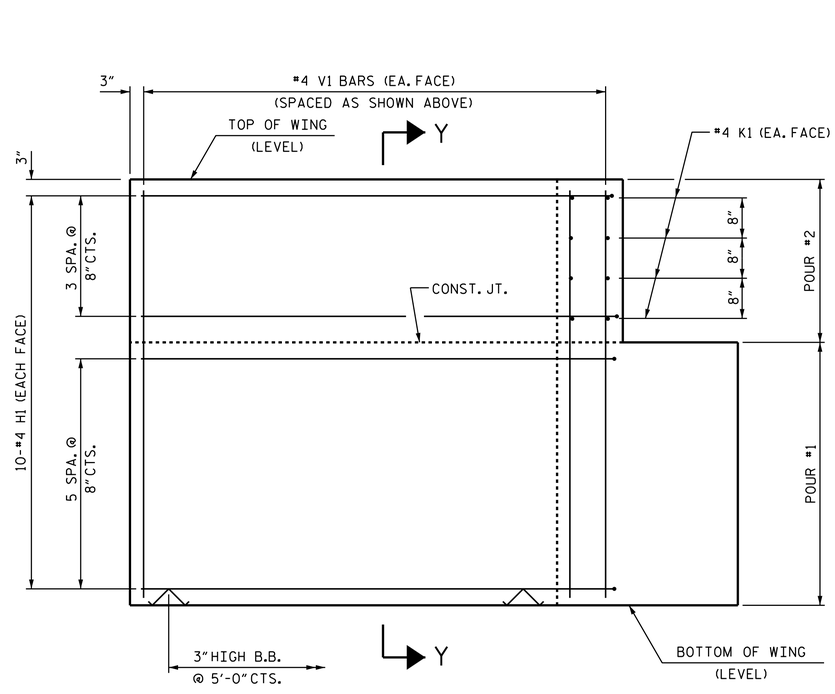

ELEVATION OF WING (W2)

WING DETAILS

PROJECT NO. B-5760

RICHMOND COUNTY

STATION: 13+70.00 -L-

SHEET 3 OF 4

STATE OF NORTH CAROLINA
DEPARTMENT OF TRANSPORTATION
RALEIGH

SUBSTRUCTURE

END BENT
WING DETAILS

NORTH CAROLINA PROFESSIONAL SEAL 039349 ENGINEER JEREMY P. McCARTHA

DocuSigned by: Jeremy McCartha
F2E41195C0D3476...
10/26/2016

DOCUMENT NOT CONSIDERED FINAL UNLESS ALL SIGNATURES COMPLETED

REVISIONS							
NO.	BY:	DATE:	NO.	BY:	DATE:	SHEET NO.	S-11
1			3			TOTAL SHEETS	14
2			4				

ASSEMBLED BY : J.S. SMITH		DATE : 7/6/16	
CHECKED BY : J. K. BOWLES		DATE : 7/21/16	
DRAWN BY : WJH	12/11	REV. 4/15	MAA/TMG
CHECKED BY : AAC	12/11		

26-OCT-2016 14:21
A:\Division08\B5760\Structures\Plans\B-5760_SMU_E*.dgn
jpmccartha

STD. NO. EB_33_90S4