ESTIMATED QUANTITIES		
BRIDGE @ STA. 13+70.00 -L-	RIP RAP CLASS II (2'-0" THICK)	GEOTEXTILE FOR DRAINAGE
	TONS	SQUARE YARDS
END BENT 1	155	170
END BENT 2	140	155

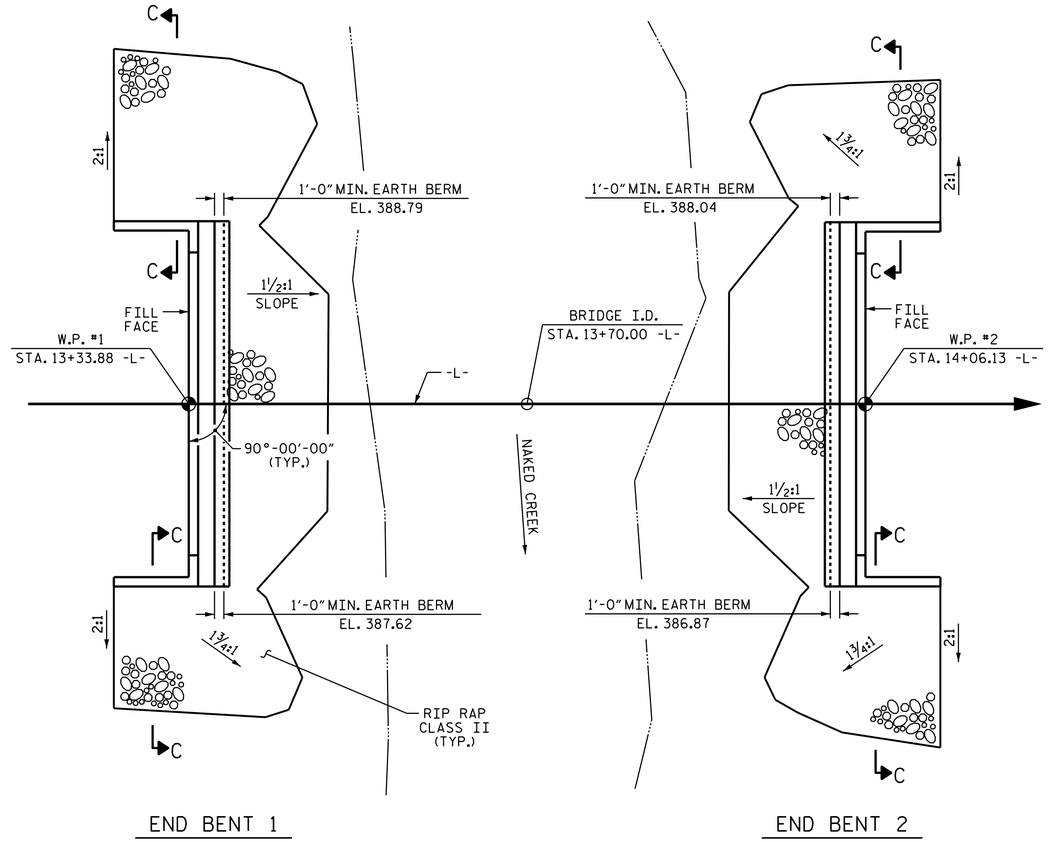

PLAN

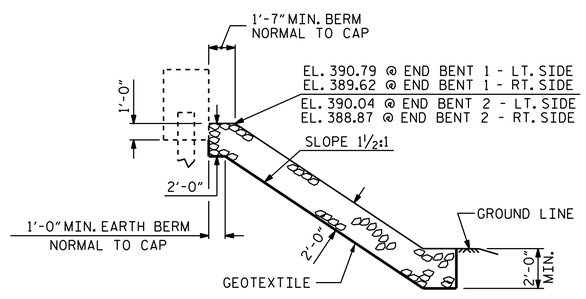

℄ SECTION
BERM RIP RAPPED

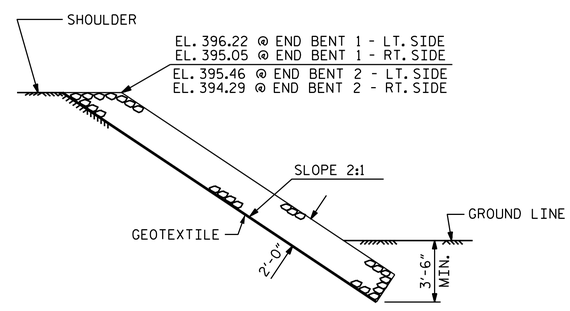

SECTION C-C

PROJECT NO. B-5760
RICHMOND COUNTY
STATION: 13+70.00 -L-

STATE OF NORTH CAROLINA
DEPARTMENT OF TRANSPORTATION
RALEIGH

STANDARD

RIP RAP DETAILS

NORTH CAROLINA PROFESSIONAL SEAL 039349 ENGINEER JEREMY P. McCARTHA

DocuSigned by: Jeremy McCartha
F2E41195C003476...
10/26/2016

DOCUMENT NOT CONSIDERED FINAL UNLESS ALL SIGNATURES COMPLETED

REVISIONS						
NO.	BY:	DATE:	NO.	BY:	DATE:	
1			3			
2			4			

SHEET NO. S-13
TOTAL SHEETS 14

ASSEMBLED BY : J. K. BOWLES		DATE : 8/8/16	
CHECKED BY : J.P. MCCARTHA		DATE : 10/12/16	
DRAWN BY : REK 1/84	REV. 5/1/06R	TLA/GM	
CHECKED BY : RDU 1/84	REV. 10/1/11	MAA/GM	
	REV. 12/21/11	MAA/GM	

26-OCT-2016 14:21
A:\Division08\B5760\Structures\Plans\B-5760_SMU_RR.dgn
jpmccartha

STD. NO. RR1