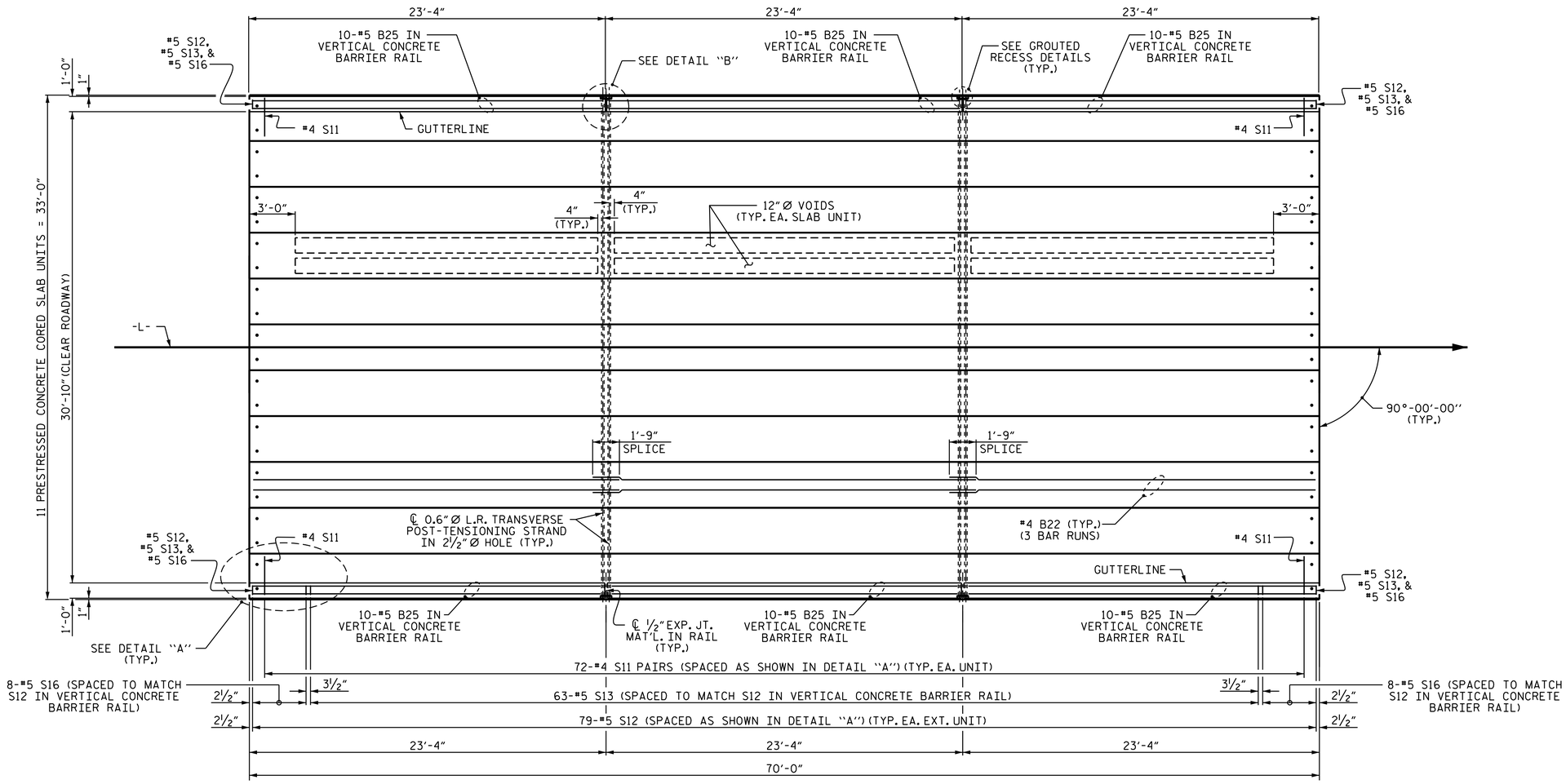

PLAN OF UNIT

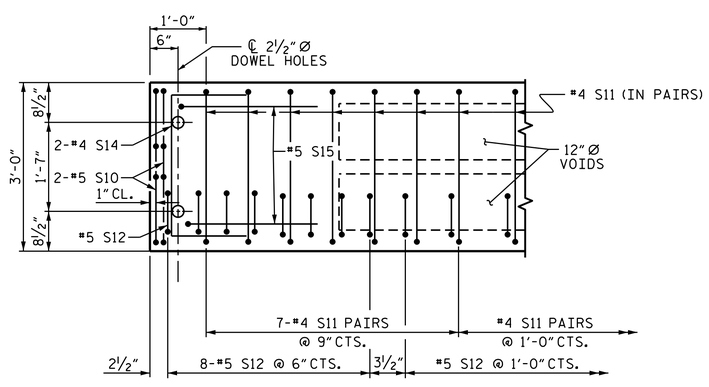

DETAIL "A"

(TYPICAL EACH END OF UNIT)
NOTE: EXTERIOR UNIT SHOWN - INTERIOR UNIT SIMILAR EXCEPT OMIT #5 S12 BARS.

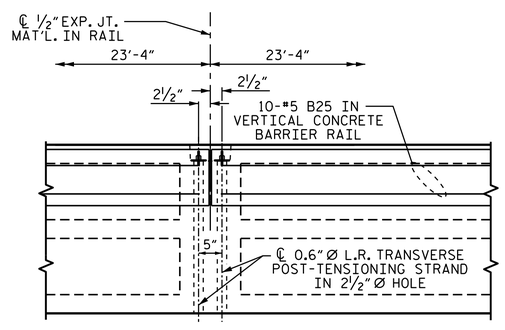

DETAIL "B"

#4 S11 BARS MAY BE SHIFTED AS NECESSARY TO MAINTAIN 1" CLEAR TO GROUTED RECESS AND 2½" Ø TRANSVERSE POST-TENSIONING STRAND HOLES

PROJECT NO. B-5760
RICHMOND COUNTY
STATION: 13+70.00 -L-

SHEET 2 OF 3

STATE OF NORTH CAROLINA
DEPARTMENT OF TRANSPORTATION
RALEIGH

PLAN OF 70' UNIT 30'-10" CLEAR ROADWAY 90° SKEW

NORTH CAROLINA PROFESSIONAL SEAL 039349 ENGINEER JEREMY P. McCARTHA

DocuSigned by: Jeremy McCartha
F2E41195C0D3476...
10/26/2016

DOCUMENT NOT CONSIDERED FINAL UNLESS ALL SIGNATURES COMPLETED

REVISIONS						SHEET NO.
NO.	BY:	DATE:	NO.	BY:	DATE:	S-6
1			3			TOTAL SHEETS
2			4			14

ASSEMBLED BY :	J.S. SMITH	DATE :	7/6/16
CHECKED BY :	J. K. BOWLES	DATE :	7/21/16
DRAWN BY : MAA	6/10	REV. 12/5/11	MAA/AAC
CHECKED BY : MKT	7/10	REV. 8/14	MAA/TMG

26-OCT-2016 14:21
A:\Division08\B5760\Structures\Plans\B-5760_SMU_CS.dgn
jpmccartha

STD. NO. 24PCS 33 90S 70L