PROJECT REFERENCE NO.	SHEET NO.
B-5760	2A-1
ROADWAY DESIGN ENGINEER	PAVEMENT DESIGN ENGINEER

SEPI ENGINEERING & CONSTRUCTION
1025 Wade Avenue
Raleigh, NC 27605
Tel:919-789-9977
Fax:919-789-9591
License: C-2197

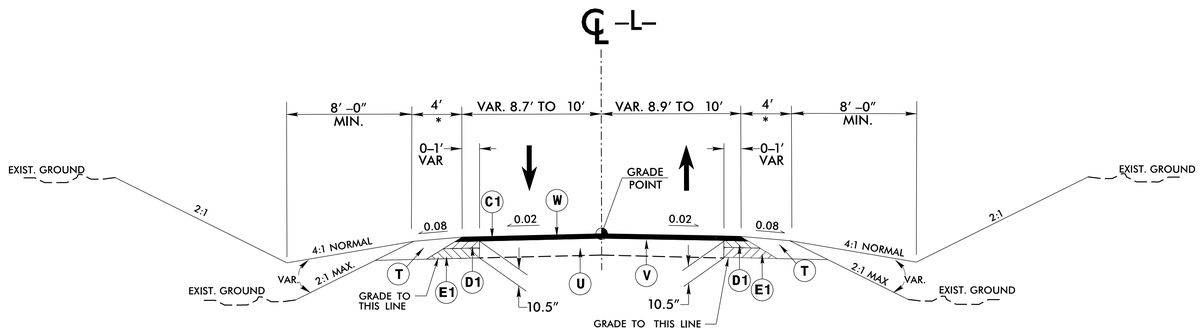

TYPICAL SECTION NO. 1

–L– STA. 12+55.00 TO –L– STA. 12+80.00

–L– STA. 14+50.00 TO –L– STA. 15+30.00

NOTE: OVERLAY EXISTING PAVEMENT AND PAVED SHOULDER TRANSITION
–L– STA. 12+00.00 TO –L– STA. 12+55.00

* ADD 3′ TO SHOULDERS FOR GUARDRAIL

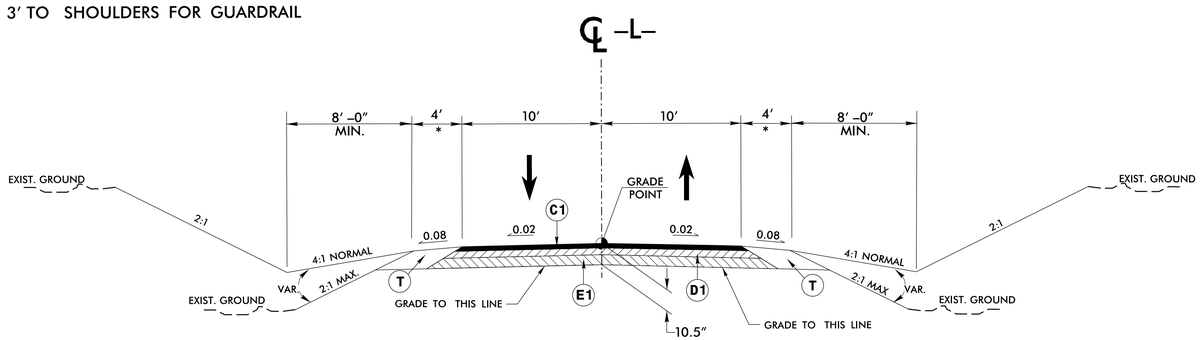

TYPICAL SECTION NO. 2

–L– STA. 12+80.00 TO –L– STA. 13+33.88 (BEGIN BRIDGE)

–L– STA. 14+06.13 (END BRIDGE) TO –L– STA. 14+50.00

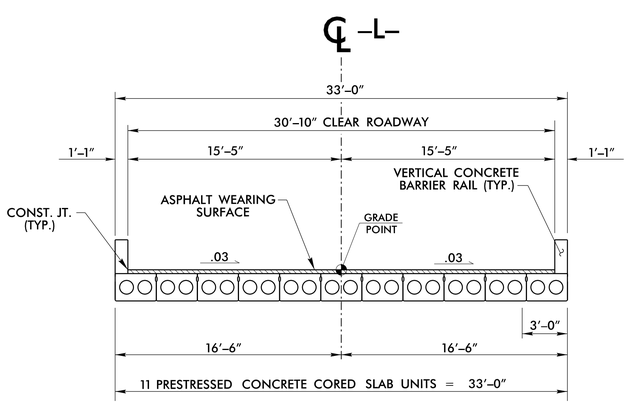

TYPICAL BRIDGE SECTION NO. 1

–L– STA. 13+33.88 TO –L– STA. 14+06.13

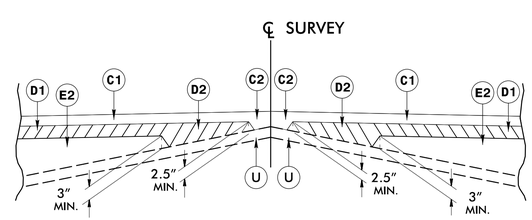

Detail Showing Method of Wedging

PAVEMENT SCHEDULE

C1	PROP. APPROX. 2″ ASPHALT CONCRETE SURFACE COURSE, TYPE SF9.5A, AT AN AVERAGE RATE OF 110 LBS. PER SQ. YD. IN EACH OF TWO LAYERS.
C2	PROP. VAR. DEPTH ASPHALT CONCRETE SURFACE COURSE, TYPE SF9.5A, AT AN AVERAGE RATE OF 110 LBS. PER SQ. YD. PER 1″ DEPTH TO BE PLACED IN LAYERS NOT TO EXCEED 1.5″ IN DEPTH.
D1	PROP. APPROX. 3.0″ ASPHALT CONCRETE BASE COURSE, TYPE I19.0B, AT AN AVERAGE RATE OF 342 LBS. PER SQ. YD.
D2	PROP. VAR. DEPTH ASPHALT CONCRETE BASE COURSE, TYPE I19.0B, AT AN AVERAGE RATE OF 114 LBS. PER SQ. YD. PER 1″ DEPTH TO BE PLACED IN LAYERS NOT GREATER THAN 4.0″ IN DEPTH OR LESS THAN 2.5″ IN DEPTH.
E1	PROP. APPROX. 5.5″ ASPHALT CONCRETE BASE COURSE, TYPE B25.0B, AT AN AVERAGE RATE OF 627 LBS. PER SQ. YD.
E2	PROP. VAR. DEPTH ASPHALT CONCRETE BASE COURSE, TYPE B25.0B, AT AN AVERAGE RATE OF 114 LBS. PER SQ. YD. PER 1″ DEPTH TO BE PLACED IN LAYERS NOT GREATER THAN 5.5″ IN DEPTH OR LESS THAN 3.0″ IN DEPTH.
T	EARTH MATERIAL.
U	EXISTING PAVEMENT.
V	0″-2″ VARIABLE MILLING.
W	WEDGING.

NOTE: PAVEMENT EDGE SLOPES ARE 1:1 UNLESS SHOWN OTHERWISE

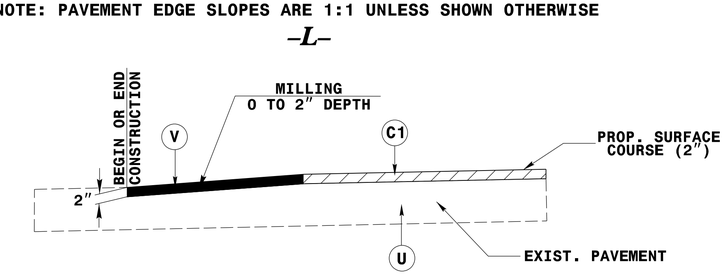

LINE	FROM	TO
–L–	12+00.00	12+50.00
–L–	14+80.00	15+30.00

NOTE: MIRROR FOR END OF CONSTRUCTION

REVISIONS

8/17/99

11/4/2016
P:\B-5760_Rdy_typ_2A-1.dgn
SEPI\Bridge\rjrc